Instructions Manual

DIGITAL TAP POSITION INDICATOR - IPTE

DIGITAL TAP POSITION INDICATOR – IPTE

ANSI 77

INSTRUCTIONS MANUAL

INDEX

INTRODUCTION

The TAP Position Indicator IPTE applies to the TAP Position Remote Indication for Transformers that work with On Load TAP Changer.

The IPTE box is built in Aluminium considering DIN standards for fixation in panels. Its dimensions are: 48 x 96 x 142 mm.

IPTE was designed following stricts quality standards and projected to withstand severe working conditions. It can be installed in substation courtyards, offshore platforms and chemical industries. It meets the requirements of supportability and reliability according to standards **IEC, DIN, IEEE and ABNT**.

The IPTE has an appropriated input to receiving the signal from a Resistor Contact Series of a TAP changer. In this manner, there are two possible ways to indicate on the IPTE display the current TAP position in a simple numeric form (1..51) or bilateral form (-24..0..24).

The IDE still makes available the TAP indication on an universal analog output: 0..1, 0..5, 0..10, 0..20 or 4..20 mA (or other customized type – acc. request), or through digital output (RS485) with Modubs RTU or DNP3 (L1) protocols. With this digital output it's possible to remotely access all the configuration parameters as well as commands to increase and decrease TAP, and change its status (Automatic / Manual and Local / Remote).

The IPTE also counts with resources to indicate the readout failure when there is a TAP change time above 10 s or any other kind of failure during readout of Resistor Contact Series of a TAP changer (cable rupture, resistor burn, etc).

MAIN FEATURES

- 4 digits display with high brightness, height of 20 mm and decimal digit Of 13 mm (red);
- Measurement range from 0 to 50 Positions (0 to 5000 Ω) maximum step of 100 Ω;
- Input signal from TAP changer (mA or Resistive);
- Power Supply 48 to 265 Vdc/Vac;
- RS485 digial output **(ANSI/TIA/EIA-485-A)** with Modbus RTU and DNP3 (L1) protocols to remote access to all measured parameters;
- Configurable analog output from 0..1, 0..5, 0..10, 0..20 and 4..20 mA directly on the frontal keyboard;
- Frontal USB 2.0 to configuration through software UseEasy™;
- Memory storage for maximum and minimum reached TAP;
- Contact to failure indication (Watchdog);
- Protection degree IP20 **(NBR IEC 60529);**
- Auto Baud Rate from 2.400 to 57.600 bps (Automatically detects the net speed communication);
- High resistance mechanical enclosure, entirely built in aluminium according to **DIN IEC 61554**;

DIGITAL TAP POSITION INDICATOR – IPTE

ANSI 77

- Reduced size: 48 x 96 x 140 mm;
- Easy to use and configure;
- Warranty of 2 years.

TECHNICAL DATA

TAP Digital Position Indicator - IPTE	
Power Supply	48 to 265 Vdc/Vac 50/60 Hz
Operation Temperature	-40 to +85 °C
Power consumption	< 15 W
TAP Measurement Input	TAP changer from 0 to 5000 Ω Transducer: 0..20 mA or 4..20 mA
Measurement Range	-50 to 50 TAPs – Programmable (50 positions)
Options for Analog Outputs and Maximum Loads	0..1 mA - 8000 Ohms
	0..5 mA - 1600 Ohms
	0..10 mA - 800 Ohms
	0..20 mA - 400 Ohms
	4..20 mA - 400 Ohms
Analog Output Maximum Error	0.25% end of scale
Output contacts	8 – Free of Potential
Maximum Power Switching	70 W / 250 VA
Maximum Voltage Switching	250 Vdc/Vac
Maximum Condutction Current	6.0 A
Serial Communication Door	RS485 **(ANSI/TIA/EIA-485-A)**
Communication Protocol	Modbus RTU or DNP3 (Slave)
Auto Baud Rate	2.400 to 57.600 bps
Enclosure **(DIN IEC 61554)**	48 x 96 x 140 mm – Aluminium
IDE fixation	Embedded on panel door
Protection Degree **(NBR IEC 60529)**	IP 20

TYPE TESTS

- Insulation Voltage (IEC 60255-5): 2kV / 60Hz / 1 min. (to ground);
- Voltage impulse (IEC 60255-5): 1.2/50 µs / 5 kV / 3 neg. e 3 pos. / 5 s interval;
- Electrostatic Discharge (IEC 60255-22-2): Air mode = 8 kV / Contact mode = 6 kV;
- Irradiated electromagnetic field immunity (IEC61000-4-3): 80 a 1000 MHz / 10V/m;
- Fast electrical transient immunity (IEC60255-22-4): Power/Input/Output = 4 kV/Serial port 2 kV;
- Surge immunity (IEC60255-22-5): phase/neutral 1 kV, 5 per polar (±) - phase-ground/neutral-ground 2 kV, 5 per pole (±);
- Conduced electromagnetic perturbations immunity (IEC61000-4-6): 0,15 a 80 MHz / 10V/m;

DIGITAL TAP POSITION INDICATOR – IPTE

ANSI 77

- Climatic test (IEC60068-21-14): -40 ºC + 85 ºC / 72 hours;
- Vibration resistance (IEC60255-21-1): 3 axis / 10 to 150 Hz / 2G / 160 min/axis;
- Vibration response (IEC60255-21-1): 3 axis / 0,075 mm-10 to 58 Hz / 1G of 58 to 150 Hz / 8 min/axis.

DIMENSIONS

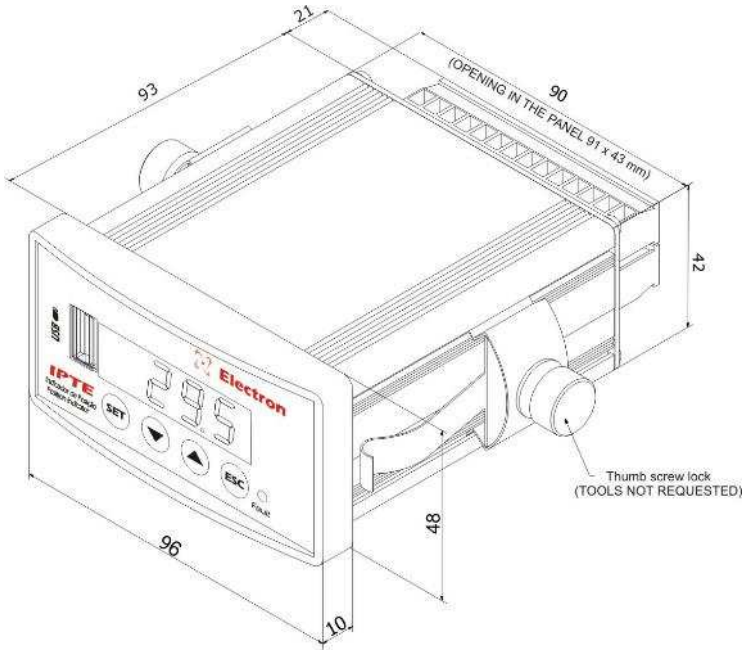

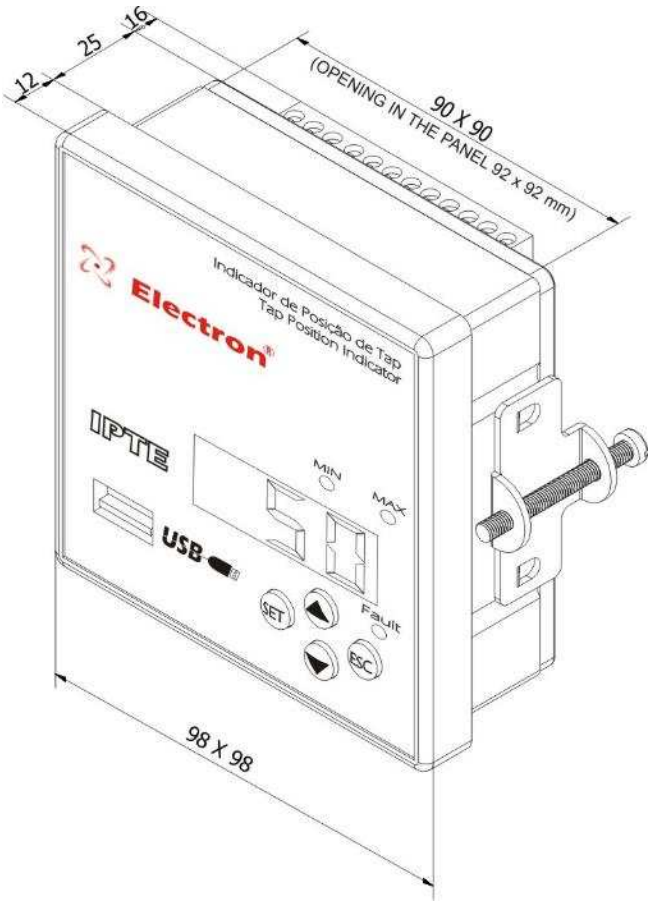

DIGITAL TAP POSITION INDICATOR – IPTE

ANSI 77

CONECTION DIAGRAM - IPTE

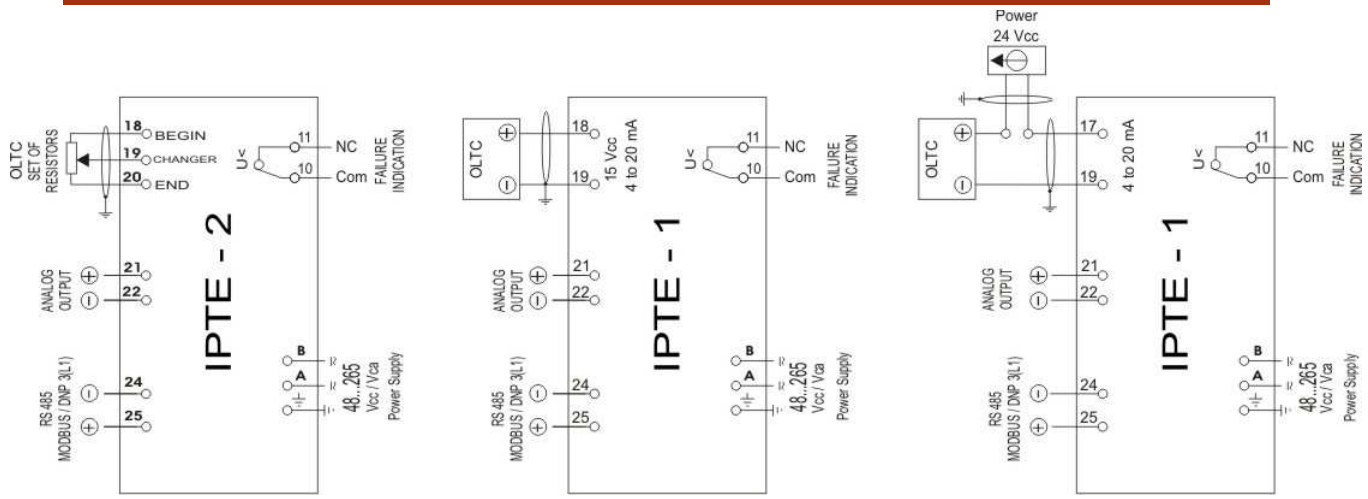

Resistive Input up to 5000 Ω ***Active Input 4 to 20 mA*** ***Passive Input 4 to 20 mA***

CONNECTION DIAGRAM OF TRANSMISSOR MODULE TO 17 POSITIONS

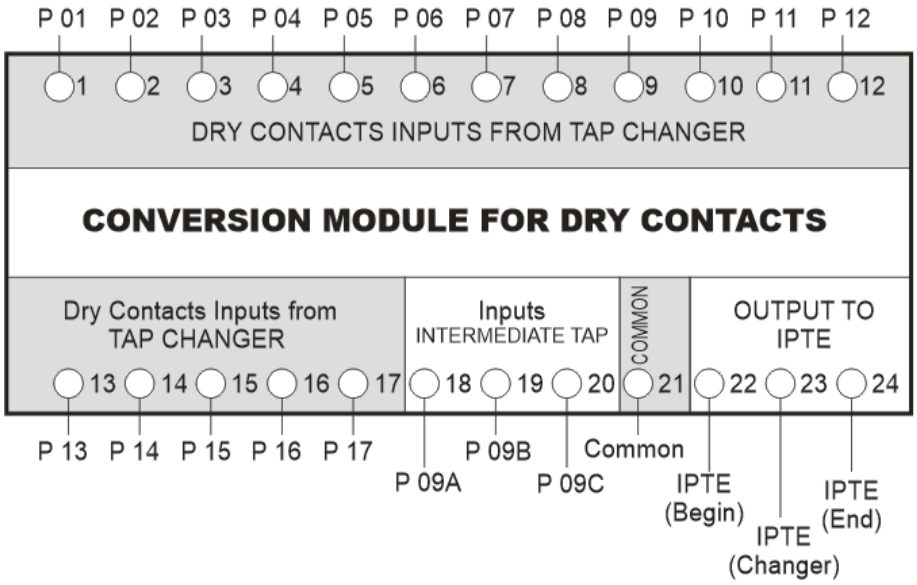

****This module must be used when the TAP changer works with dry contacts, without resistors.***

***** Jump the intermediate TAPs contacts with same Voltage.***

DIGITAL TAP POSITION INDICATOR – IPTE

ANSI 77

APPLICATION EXAMPLES

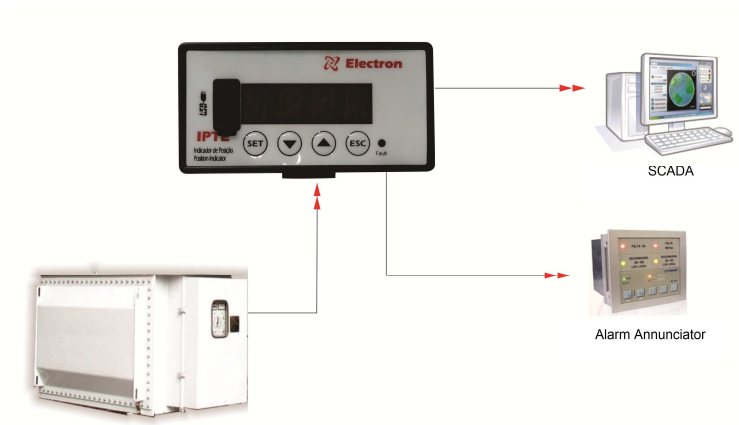

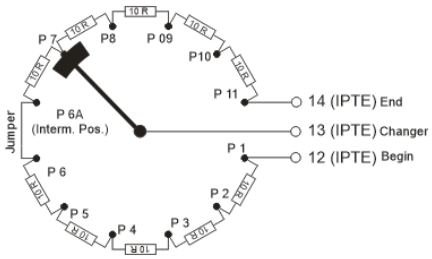

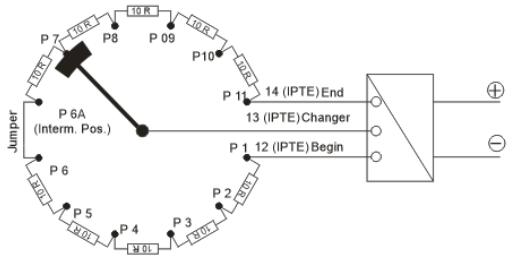

ORDERS SPECIFICATION

IPTE - [ ]

Set of Resistors Signal (IPTE input)	
1	4 ... 20mA
2	Resistive

MTCS - [ ]

Quantity of Positions

INSTALLATION ACESSORIES

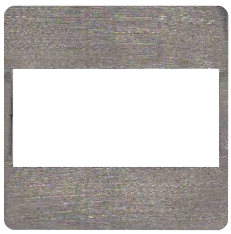

Adaptation Mask
96x96 to 48x96

Box for Outdoor use

KNOWING IPTE

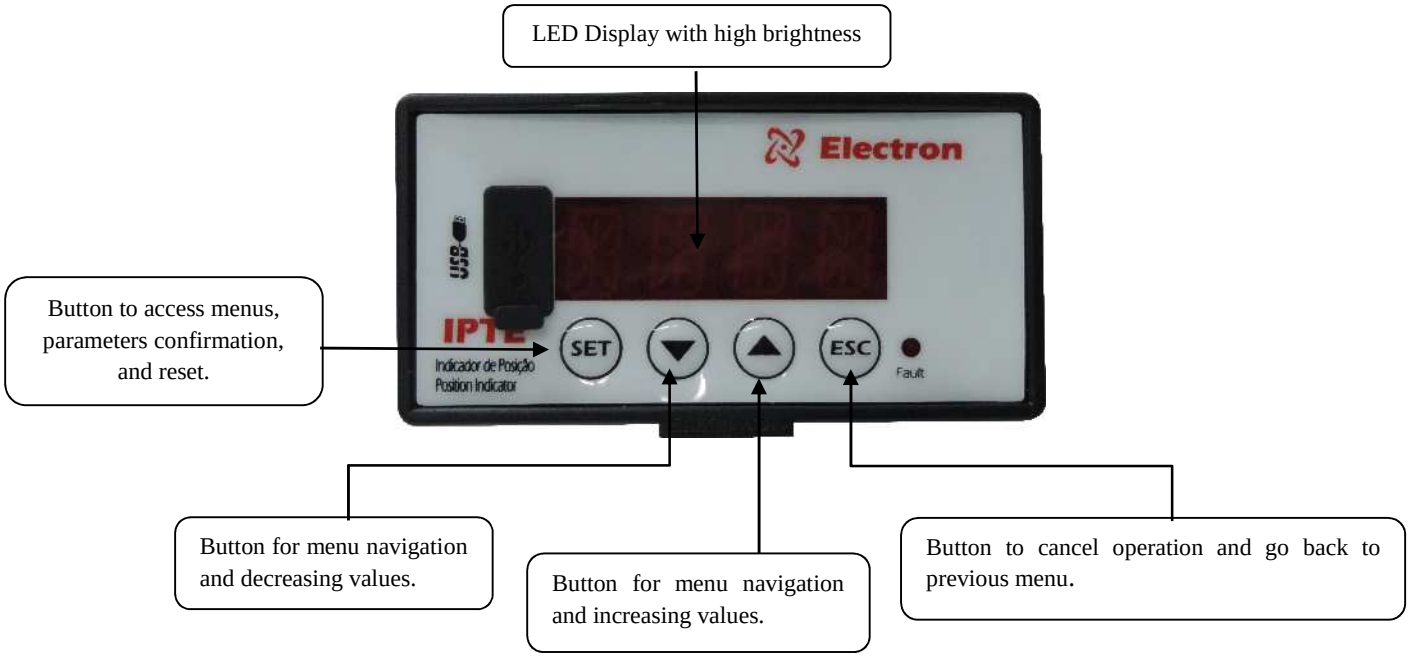

IPTE CONSULTING MENU

To access this menu, press the button SET. Using the decrease or increase button, select the option INDC and after SET. Next, use the increase / decrease button to navigate in the menu. To consult the chosen parameter, press button SET and to return to the menus, press ESC.

Menu	Parameter	Description
INDC	**NMAX**	Consults the maximum reached position by IPTE. To go back, press the button **ESC**.
	NMIN	Consults the minimum reached position by IPTE. To go back, press the button **ESC**.
RMX	**NMAX** **NMIN**	Menu to reset the recorded Maximum or Minimum TAP position and start a new measurement interval. **NMAX** resets the maximum reached value by IPTE pressing the **SET** button. **NMIN** resets the minimum reached value by IPTE pressing the **SET** button. When erased the maximum and/or minimum values, automatically the current register becomes the memorized value. To go back to initial menu, press **ESC**.

IPTE CONFIGURATION

Pressing the button **SET** in the option CONF, it will show up on the display a 4 digits number that is the password reminder and next will show up "0000". Use the increase/decrease buttons to type the password, to confirm the number and go to next digit, press **SET** (to go to the previous digit, press **ESC**). After confirmed the 4 digits, if the password is correct, it will enter on configuration menu displaying the initials **MCPO**. If wrong password, the display will show "0000" again.

Note: The original password is 0000 and the reminder number is 1807. In case of forget a changed password, please send the showed reminder number to ELECTRON and a new password will be redefined.

Menu	Parameter	Variable	Description
MCPO	**INIC** **FINL**	**-50 to 50**	Menu to configure the position range indication. Use the increase/decrease buttons to set the initial position value and press the button SET. Automatically will show up the menu to set the final position value. Confirm the parameterized value pressing the button **SET**. **Notes:** After configuring the initial and final position, the IPTE recognizes automatically the TAP changer total number of positions and the analog output varies inside this range.
CPAR	**CPAR**	**4.7 to 100 Ω**	Menu to set the Resistance step of the TAP changer or of the Transmission Module (MTCS), to confirm press **SET**.
MODO	**NUM** **ALFA**	----------	Menu to choose the indication mode of the TAP position on the IPTE display. **NUM**: On this mode, the indicator shows the TAP positions in numeric mode. **ALFA**: On this mode, the indicator shows the TAP positions above the neutral value as "R", below as "L". Select the mode and confirm pressing **SET**.
TIPO	**D0** **D1**	----------	Menu to choose the initialization mode for the TAP changer readout. **D0**: The indicator considers the positions from 0 Ω. **D1**: The indicator considers the initial Resistance of the TAP changer. Select the initialization mode for the TAP changer and confirm pressing the button **SET**.
RASA	**D0** **D1** **D2** **D3** **D4**	----------	Menu for analogic output: ❖ **D0**- 0..1 mA ❖ **D1**- 0..5 mA ❖ **D2**- 0..10 mA ❖ **D3**- 0..20 mA ❖ **D4**- 4..20 mA Select the chosen option and confirm pressing button **SET.**

VCS	**AUTO** **V1** **to** **V7**	----------	Menu to set the serial communication speed: **AUTO**: Automatically detects the communication speed; ❖ **V1**: Sets the speed in 1200 bps. ❖ **V2**: Sets the speed in 2400 bps. ❖ **V3**: Sets the speed in 4800 bps. ❖ **V4**: Sets the speed in 9600 bps. ❖ **V5**: Sets the speed in 19200 bps. ❖ **V6**: Sets the speed in 38400 bps. ❖ **V7**: Sets the speed in 57600 bps. Set the chosen communication speed and confirm pressing the button **SET**.
ERS	----------	**1 to 254**	Menu to adjust the Net Address, each equiment connected to the net RS485 (pins 24 and 25) must have a different address from others, in a way that the computer can indentify it. Set the Serial Net address using the increase/decrease buttons and confirm pressing the button **SET.**
PROT	**DNP** **MDB**	----------	Menu to select the Communication Protocol: ❖ **DNP:** Sets the communication protocol as DNP 3 (L1) ❖ **MDB:** Sets the communication protocol as Modbus RTU Select the protocol and confirm pressing the button **SET**.

ANSI 77

Menu	Parameter	Variable	Description
PARI	**NONE** **IMPAR** **PAR**	----------	Menu to select the parity, the last bit to be transmitted in the verification message of the data integrity. ❖ **NONE –** No parity. ❖ **IMPAR –** Last bit: 1 ❖ **PAR –** Last bit: 0 Select the chosen option and confirm pressing the button **SET**.
TEST	**REL1** **LEDS**	----------	Menu to test the relay actuations and leds lighting in order to check the IPTE installation and indication. **REL1** – Actuates relay 1 after pressing **SET**. **LEDS** – Lights up all LEDs from display after pressing **SET**.
LORL	**REL1**	**D0** **D1**	Menu to select the Relay Logic: ❖ D0 – Initial conditions of Relay: OFF ❖ D1 – Initial conditions of Relay: ON Select the relay logic option and confirm pressing the button **SET**.
PASS	----------	**0000** **to** **9999**	Menu to change the password of 4 digits. This password is used to access the configuration menu of IPTE. To change the numbers, use the button increase/decrease. To confirm the chosen digit and go to next digit, press SET. To return to the previous digit, press ESC. ***The original password is 0000. In case of missing password, please, get in touch with Electron do Brasil and inform the reminder number.***
FABR	----------	----------	Menu exclusive to Electron do Brasil. To exit the Menu, press SET.

ANSI 77

IPTE SERIAL COMMUNICATION

Protocol: ***MODBUS RTU or DNP 3.0***
Transmission Rate: 2400 to 57.600 **(Auto Baud Rate)**
Data bits: **8**
Stop bit: **1**
Variable type: **Holding Registers (40.000)**

Modbus Address	DNP Address	Readout Range	Bits Index	State	Description Point Name	Write / Read	Scale
1	1	-50 – 50	-	-	TAP initial position	W / R	-1000
2	2	-50 – 50	-	-	TAP final position	W / R	-1000
3	3	4.7 – 100	-	-	Resistive step	W / R	1:10
4	4	0 – 4	-		Regsiter – Analog Output Type	-	
			-	0	0: defines analog output 0 to 1 mA	W / R	-
				1	1: defines analog output 0 to 5 mA	W / R	-
				2	2: defines analog output 0 to 10 mA	W / R	-
				3	3: defines analog output 0 to 20 mA	W / R	-
				4	4: defines analog output 4 to 20 mA	W / R	-
5	5	-	-		Register – Commands	-	
			0	1	Reset Minimum Reached Position	W	-
			1	1	Reset Maximum Reached Position	W	-
			2	1	Reset Equipment	W	-
6	6	-50 – 50	-	-	TAP Position	R	-1000
7	7	-50 – 50	-	-	Minimum Reached TAP Position	R	-1000
8	8	-50 – 50	-	-	Maximum Reached TAP Position	R	-1000

ANSI 77

IPTE SERIAL COMMUNICATION

Modbus Address	DNP Address	Readout Range	Bits Index	State	Description Point Name	Write / Read	Scale
9	9	-	-		Register – Communication Protocol	-	
			-	0	DNP 3.0	R	1:1
				1	Modbus RTU	R	1:1
10	10	0 - 2	-		Register – Communication Parity	-	
			-	0	No Parity	R	1:1
				1	Parity Even	R	1:1
				2	Parity Odd	R	1:1
11	11	-	-		Register – Failure	-	
			0	1	TAP changer failure	R	-
12	12	0000 - 9999	-	-	Password Reminder	R	1:1

DEFECT SOLUTION

Display	Cause	Solução
SOFF	The sensor signal does not arrive reliable to IPTE	Check and replace the sensor cable if the sensor is not shielded
		Check the grounding of sensor cable
		Check and eliminate possible bad connections

The IPTE go back automatically to reading mode when situation is normalized. To reset the IPTE, press **SET** for approximately 5 seconds, untill show up on the display the word **REST**. Next, release the button and the equipment will restart.

The IPTE has a failure contact (relay #4). It will act in case of **SOFF** or if there is a drop in the power supply.

IMPORTANT RECOMMENDATIONS

Before start the IDE operation, verify the following recommendations:

1. All the sensors, as well as the equipment must be grounded. Do not use the same grounding point to power supply and to the sensor in order there not be potential difference.

The sensors and power supply correctly grounded avoid any bad functioning or damages in perturbation cases, surges and inductions in the equipment.

2. In the communication net (RS485), use 120 Ω resistors on the ends of transmission line (begin and end) in order to generate a potential difference necessary to the correct working of communication net.

3. Do not use the equipment directly in the sun. When the installation is outdoor is important to have a panel with smoked glass in order to filter the UV radiation which damages the frontal polycarbonate of the equipment. In this manner, the life time your equipment will be extended.

WARRANTY TERM

The digital TAP position indicator Electron has 2 years warranty counted from the sales date informed on the fiscal invoice and its coverage is destinated to manufacture defects that become the equipment improper to the previously informed application.

Warranty Exclusion

This warranty does not cover costs due to technical assistance transports, freights or insurances related to the transportation of products with denotation of defect or bad function. Also, it's not coverde by this warranty the following events:

- Natural wear due to continuous and frequent use;
- Damages caused by falls or inappropriate storage;
- Repair attempt or seal violation done by person not officialy authorized by Electron;
- Usage not according to the instructions informed in technical descriptions.

Warranty Loss

The product will lose its warranty for the following situations:

- When not respected and followed the instructions for use and assembling contained in this manual and the installation procedures contained in the standard NBR 5410.
- When the equipment is submitted to conditions out of the specified limits in its technical descriptions.
- When the equipment seal is broken or repaired by a person not officially authorized by Electron.
- Damage caused by fall or impact.
- Occurs water or any other liquid infiltration.
- Occurs overload causing damage in the components and parts of the product.

Warranty Using

For the use of this warranty, the customer must send the product to Electron together to a copy of its fiscal invoice properly packed in order to avoid damages during transport. For a more effective attendance, it's suggested to supply the most detailed information concerning the detected defect. The equipment will be analysed and submitted to functioning tests.

The product analysis and its eventual maintenance only will be carried by technical staff of Electron in its headquarter.